KEMET Part Number: R82EC2470Z360K

(82EC2470Z360K)

Capacitor, film, 0.047 uF, +/-10% Tol, -55/+105C, General Purpose, 100V@85C, Lead Spacing=5 mm

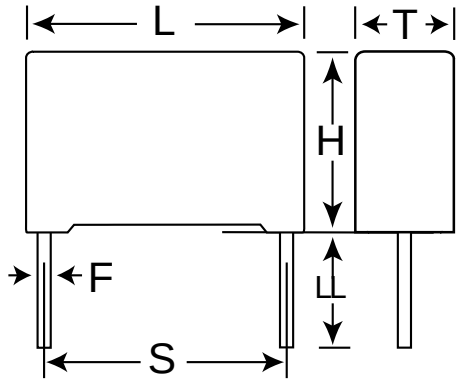

Dimensions (mm)		
Symbol	Dimension	Tolerance
L	7.2	+0.2
H	6.5	+0.1
T	2.5	+0.1
S	5	+/-0.4
LL	17	+1/-2
F	0.5	+/-0.05

Notes:
-L,H,T are nominal dimensions and do not imply a minimum.

General Information	
Supplier:	KEMET
Brand:	Arcotronics
Miscellaneous Electrical:	Not for new design. Use series F611-F612

Specifications	
Capacitance:	0.047 uF
Rated Temperature:	85C
Voltage @ rated temp:	100V
Voltage AC:	63VAC
Tolerance:	+/-10%
Body Type:	Radial Box
Dielectric:	Metallized Polyester (Stacked)
Application:	General Purpose
Temperature Range:	-55/+105C
Dissipation Factor @ 1 kHz:	0.8%
Dissipation Factor @ 10 kHz:	1.2%
Dissipation Factor @ 100kHz:	2.5%
Insulation Resistance:	15 GOhm
Inductance:	7 nH
Maximum dVdT:	200v/us
Maximum K0:	40000V^2/us

Packaging Specifications	
Package Kind:	Bulk
Package Type:	Bag
Package Quantity:	4000

Statements of suitability for certain applications are based on our knowledge of typical operating conditions for such applications, but are not intended to constitute - and we specifically disclaim - any warranty concerning suitability for a specific customer application or use. This Information is intended for use only by customers who have the requisite experience and capability to determine the correct products for their application. Any technical advice inferred from this Information or otherwise provided by us with reference to the use of our products is given gratis, and we assume no obligation or liability for the advice given or results obtained.

© 2006-2013 IntelliData.net